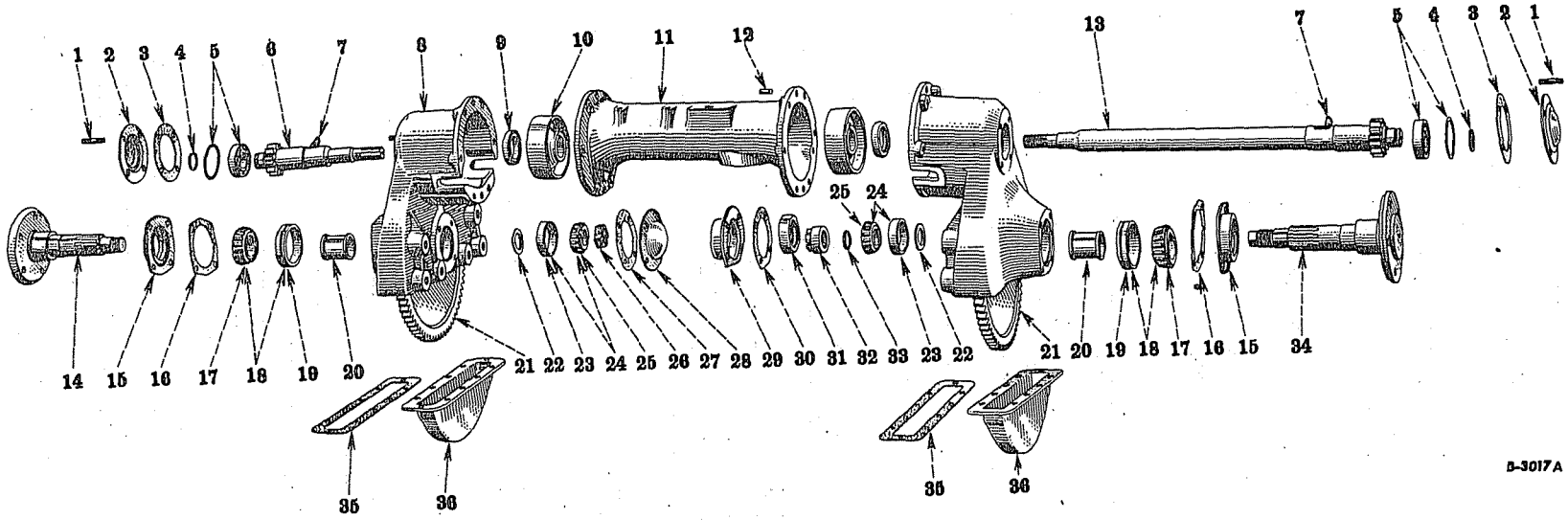

FINAL DRIVE

Reference numbers only are shown in illustration. Use I H part numbers in ordering.
Unnumbered parts in the illustrations are the same as corresponding parts shown with numbers.