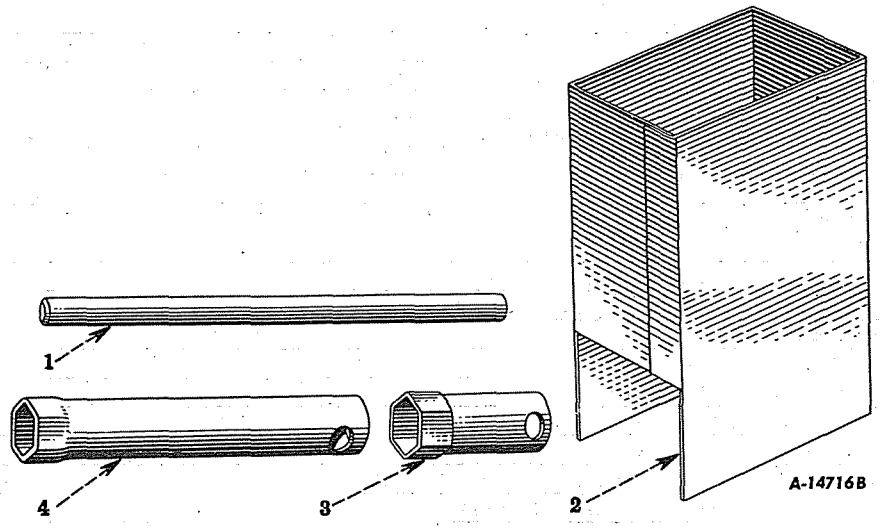

Reference numbers only are shown in illustration. Use I H part numbers in ordering.

TOOLS AND TOOL BOX

1	25 466 D	HANDLE, SOCKET WRENCH	1
2	351 014 R91	BOX, TOOL	1
	181 354	SCREW, CAP, HEX-HD., 3/8-24NF x 1/2"	1
	103 321	WASHER, LOCK, 3/8"	1
3	46 190 DC	WRENCH, SPARK PLUG	1
4	28 252 D	WRENCH, SOCKET	1